EUROECO SINGLE-LEVER BASIN MIXER 1/2″ M-SIZE - 24282001
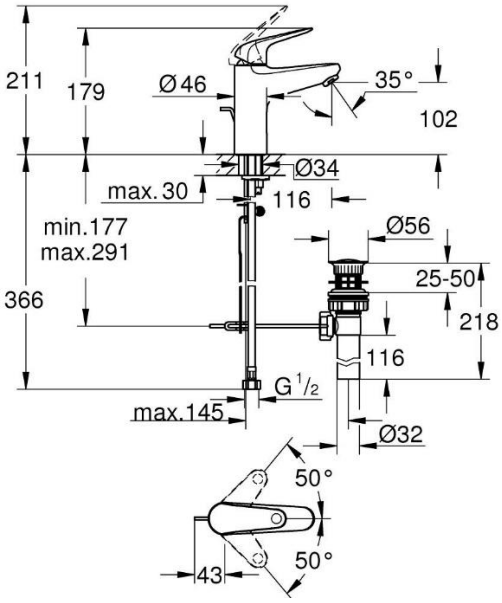
single hole installation
metal lever
GROHE Long-Life 28 mm ceramic cartridge
with temperature limiter
GROHE Long-Life finish
Lead and Nickel Free Inner Water Ways
rapid-installation-system
plastic pop-up waste set 1 1/4"
flexible connection hoses
professional edition